MPMC UNIT-5

1) What is embedded system? With schematic explain the elements of embedded Systems

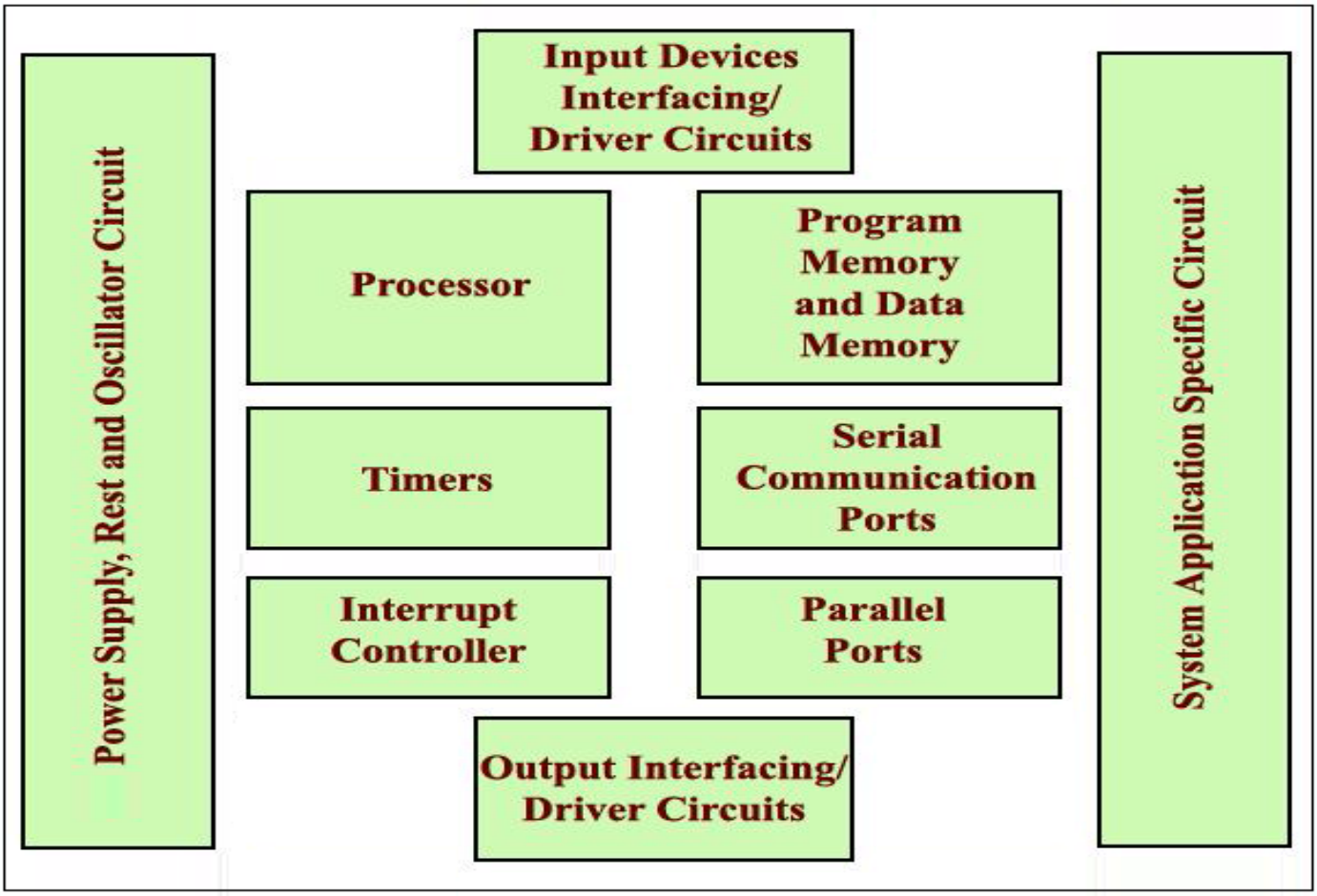

- An **embedded system** is an electronic/electro-mechanical system designed to **perform a specific function** and is combination of both **hardware** and **firmware (software).**

1. System Core (Processor)

The "brain" of the system, responsible for processing data and executing instructions.

Examples:

This can be a microcontroller, a microprocessor, a Digital Signal Processor (DSP), or a Field Programmable Gate Array (FPGA).

2.Memory

Stores the control algorithm (firmware), system software, and temporary working data.

Types:

ROM (Read-Only Memory): Holds the permanent control program and configuration details (e.g., flash, EEPROM).

RAM (Random-Access Memory): Provides temporary storage for the processor to work with (e.g., SRAM, DRAM).

3. Input/Output (I/O) Ports

Interfaces for receiving input signals from sensors or user inputs and sending output signals to actuators or user interfaces.

Examples:

Input: Push buttons, keyboards, sensors.

Output: LEDs, LCDs, buzzers, motors.

4. Peripherals

Additional specialized hardware components that enhance the system's functionality.

Examples: Timers, analog-to-digital converters (ADCs), communication modules.

5. Communication Interfaces

Allow the embedded system to communicate with other devices or networks.

Examples: Wired interfaces like UART, SPI, or wireless protocols like Wi-Fi or Bluetooth.

6. Buses

A collection of wires that allow the different components (processor, memory, peripherals) to communicate by transmitting digital signals

7.Timers: In embedded systems, a timer is a hardware component that counts time intervals based on an input clock, allowing for precise timing of events and generating delays.

8.Interrupt Controller : An interrupt controller in an embedded system manages and prioritizes hardware interrupt requests from various peripherals, directing them to the processor for handling.

9.System Application specific Integrated Circuit (ASIC):

It is a custom-designed semiconductor chip in an embedded system engineered to perform a specialized task, offering high performance and efficiency for that particular function

2) Draw the CPU architecture of MSP430 microcontroller ?

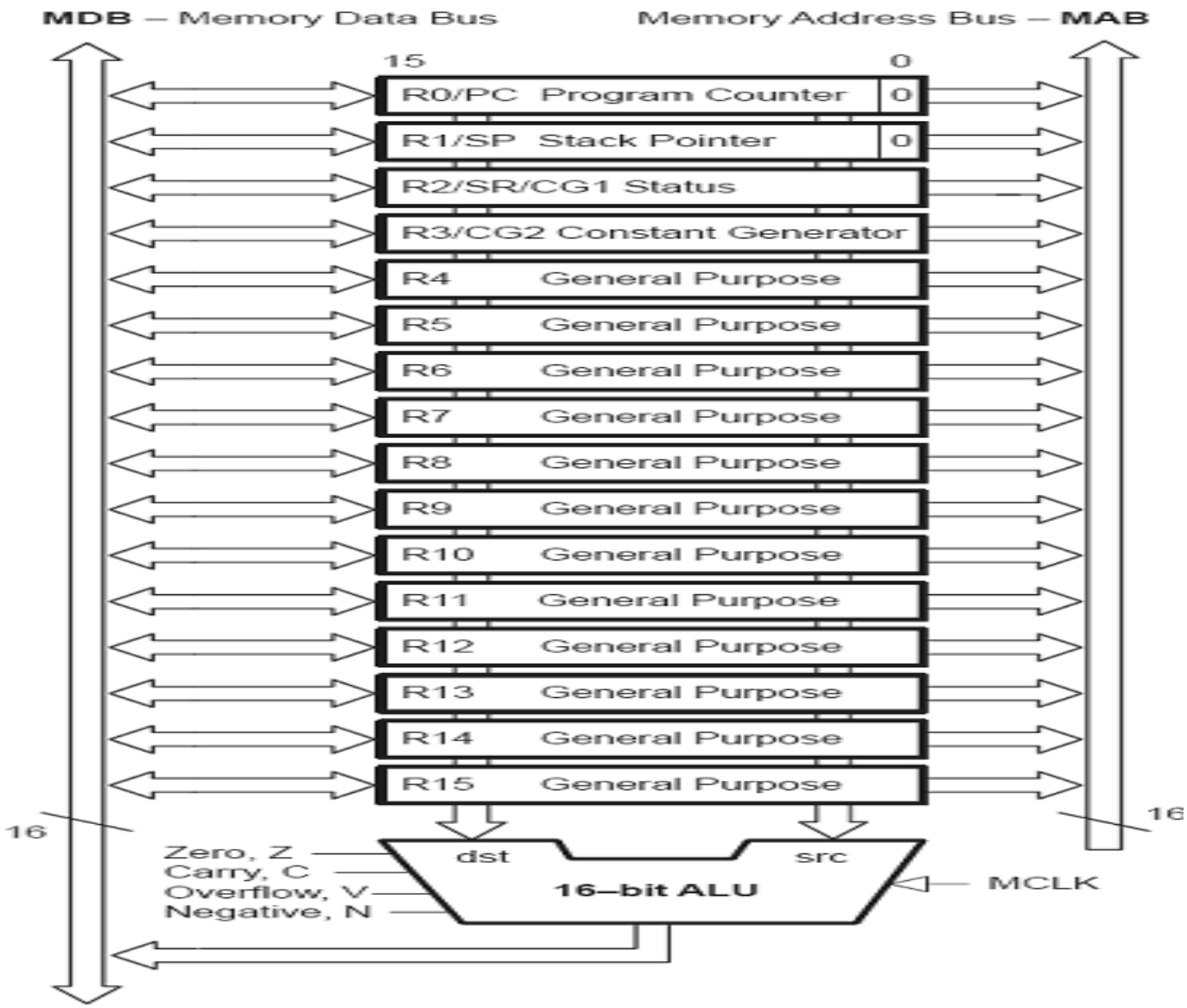

15	... bits ...	0
R0/PC	program counter	0
R1/SP	stack pointer	0
R2/SR/CG1	status register	
R3/CG2	constant generator	
R4	general purpose	
	⋮	
R15	general purpose	

MSP430 CPU registers features:

- The CPU incorporates sixteen 16-bit registers identified as (R0-R15) and includes the arithmetic logic unit (ALU), which performs computation.
- Four registers (R0, R1, R2 and R3) have dedicated functions.
- 12 working registers (R4 to R15) for general use.
- 16-bit RISC architecture with 27 core instructions and 7 addressing modes.
- Orthogonal architecture that allows each instruction to operate on any register and use any addressing mode.
- 16-bit address bus allows direct access and branching throughout entire memory range.
- 16-bit data bus allows direct manipulation of data either byte/word .
- Constant generator provides six most used immediate values (+8,+4,+2,+1,0,-1) and reduces code size.
- **The CPU features include:**
- **R0: Program Counter (PC) :**
- The 16-bit Program Counter (PC) points to address of the next instruction to be fetched from memory and executed by the CPU.
- **R1: Stack Pointer (SP):**
- The 16-bit Stack Pointer (SP) holds the address of the stack-top.
- The stack memory is a memory block where the data is stored in LIFO manner.

3) Explain the register sets of MSP430?

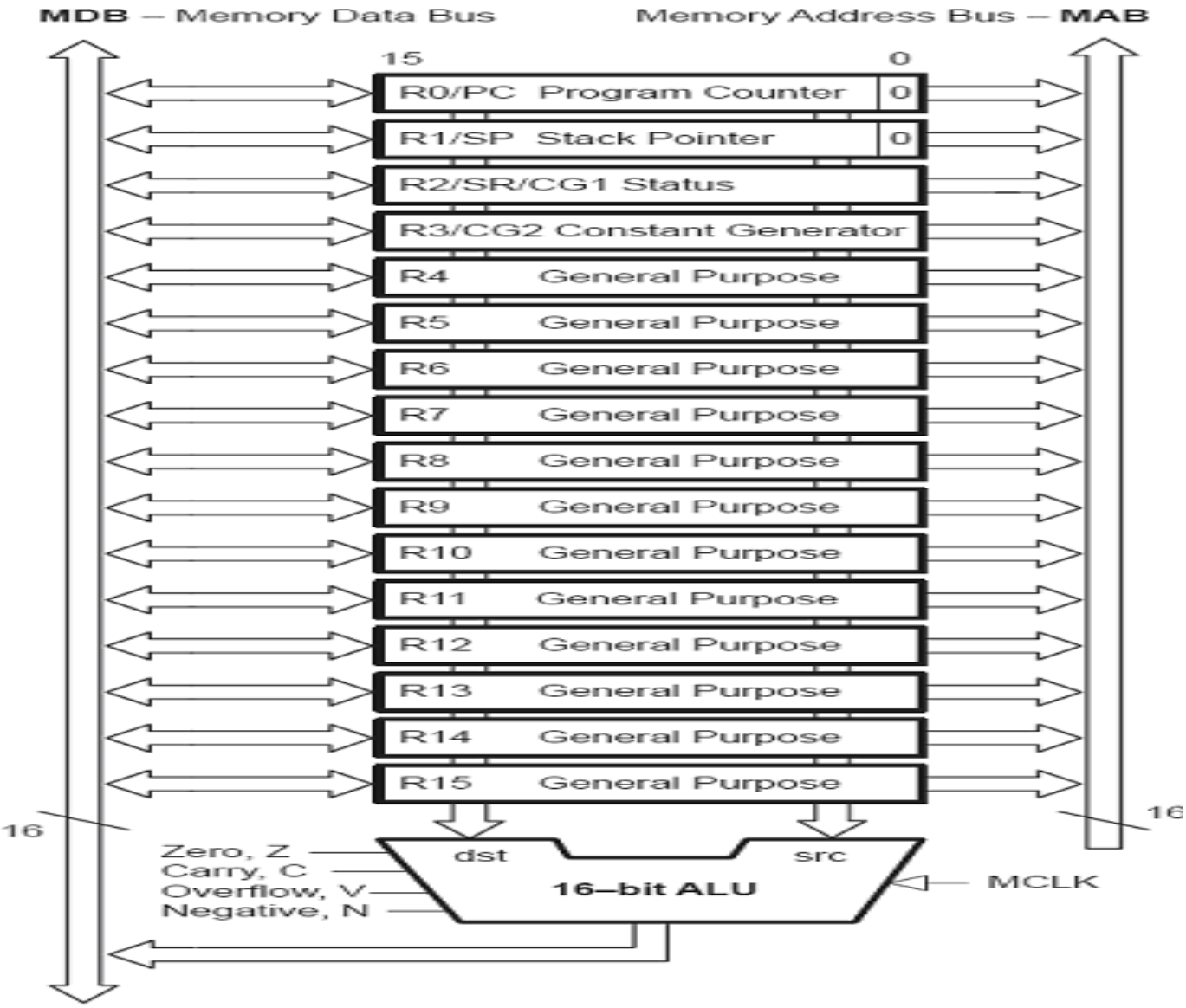

The MSP430 CPU has 16 registers (R0–R15), each 16 bits wide.

These registers are used for data manipulation, addressing, control, and status functions.

1. **<u>Special purpose registers(R0-R3)</u>**

Register	Name	Function
R0	Program Counter (PC)	Holds the address of the next instruction to be executed.
R1	Stack Pointer (SP)	Points to the top of the stack; used for subroutine calls, interrupts, and temporary storage.
R2	Status Register (SR) / Constant Generator 1 (CG1)	Holds condition flags (Z, C, N, V) and system control bits. Also acts as a constant generator in certain instructions.

Register	Name	Function
R3	Constant Generator 2 (CG2)	Provides frequently used constants like 0, 1, 2, 4, 8, etc., to speed up execution.

2. General-Purpose Registers (R4–R15):

- Used for data operations, temporary storage, and addressing.
- Can serve as source (src) or destination (dst) in arithmetic and logic operations.
- Fully orthogonal — any register can be used with any addressing mode or instruction type.

3.16-bit ALU of MSP430

1. The 16-bit ALU (Arithmetic Logic Unit) is the core computational part of the MSP430 CPU.
2. It performs arithmetic operations (addition, subtraction, increment, decrement) and logic operations (AND, OR, XOR, compare, etc.).
3. The ALU operates on 16-bit data, matching the CPU's word length, which ensures efficient and fast data processing.

4) Write about status register of MSP430 ?

R2: Status Register : the status register (sr) stores the status bits and control bits

15 … 9	8	7	6	5	4	3	2	1	0
reserved	V	SCG1	SCG0	OSC OFF	CPU OFF	GIE	N	Z	C

- SCG1 (System clock generator 1) : When set, turns off the SMCLK.
- SCG0 (System clock generator 0) : When set, turns off the DCO DC generator for DCO. if DCO-CLK is not used for MCLK or SMCLK.
- OSCOFF (Oscillator OFF) : When set, turns off the VLO and LF XT1 crystal oscillator. if LFXT1-CLK is not used for MCLK or SMCLK.
- CPUOFF : When set, turns off the MCLK, which stops the CPU.

Status Flags: Indicate some condition produced by an instruction execution.

The system flags are changed automatically by the CPU depending on the result of an operation.

C: Carry Flag: It is set to 1 , if a carry is generated in an Addition (or) borrow in Subtraction.

Z: *Zero Flag*: It is set to 1, if the result of an operation is ZERO.

A common application of Zero flag is to check whether two values are equal or not.

N: *Negative Flag*: It is made equal to the MSB of the result.

It is used with signed numbers only.

N=1 for negative results and N =0 for positive results.

V: *Signed overflow flag*:

It is set to 1, when the result of a signed operation has overflowed, even though a carry may not be generated

Enable Interrupts:

Setting the ***general interrupt enable*** **(GIE)** bit enables maskable interrupts.

Clearing the bit disables all maskable interrupts.

There are also non-maskable interrupts, which cannot be disabled with GIE.

R2/R3: Constant Generator Registers (CG1/CG2):

Depending of the source-register addressing modes (As) value, six commonly used constants can be generated without a code word or code memory access to retrieve them.

5) Explain various addressing modes of MSP430 with examples ?

The method of specifying data to be operated by an instruction is called as addressing mode.

- Immediate mode (11 / --)
- Register mode (00 / 0)
- register Indirect mode (10 / --)
- Indexed mode (01 / 1)
- Symbolic mode / PC relative (01 / 1)
- Absolute mode
- Indirect auto increment (11 / --)

1. Immediate mode:

In this addressing mode, the data is available immediately after the instruction.

Ex: mov. b #45, R6; move the immediate constant 45 to R6.

2. **Register mode:**

In this addressing mode, the data is available in any one of the registers in the CPU.

Ex: mov. w R5, R6 copies word from R5 to R6

3.Register Indirect mode: In this addressing mode, the address of the data is available in the register.

Ex: mov.w @R5, R6; load word from address (R5) to R6

If R5 = 0004 then, the content of memory address 0004 is moved to R6

4.**Indexed mode :** In this addressing mode, the address of data is the sum of constant base address and the contents of a register.

Ex: mov.b 3(R5), R6 ; load byte from address (3+R5) to R6

If R5 = 0004 then, the content of memory address 0007 is moved to R6

5. **Symbolic mode / PC Relative :**

In this addressing mode, PC is used as the base address. So the address of data is the sum of PC and relative offset address of data.

The assembler calculates the relative offset address of the data as *relative offset = LABLE – PC*

Ex: mov.w LABLE, R6 ; load word LABLE into R6

6. **Absolute mode:** In this addressing mode, the absolute address of the data is available in the instruction.

Absolute addressing is shown by the prefix " & "

Ex: mov.b &P_1IN, R6 ; load byte from port address P_1IN into R6

7. **Indirect Auto-increment Register mode:**

In this addressing mode, the address of the data is available in the register.

This addressing mode is shown by the symbol @ in front of a register with + sign after it such as @R5+ .

In other words, R5 is used as a pointer and it is automatically incremented by 1 for BYTE operation and 2 by WORD operation.

Ex: mov.w @R5+, R6 ; load word from address (R5) into R6 and increment R5 by 2

6) **Draw the block diagram of MSP430** ?

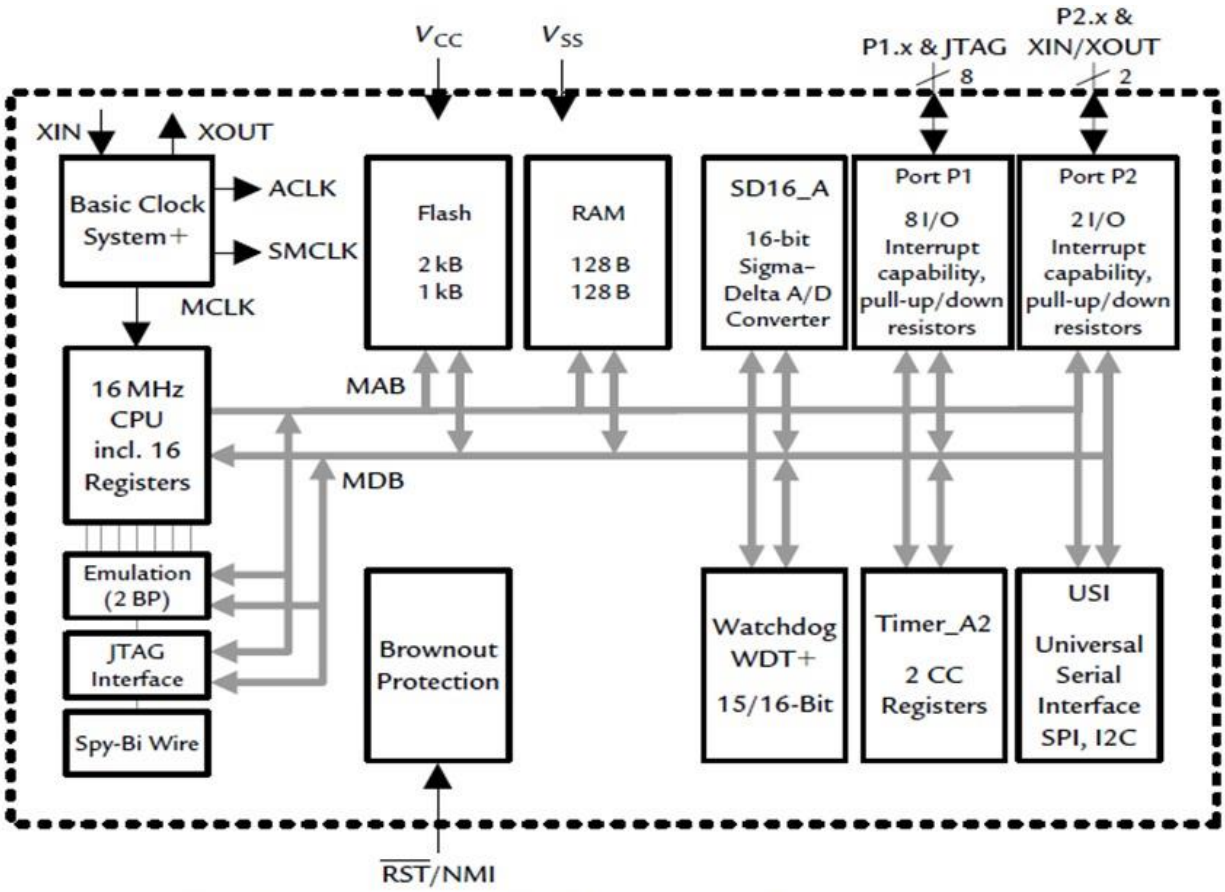

Block diagram of the MSP430F2003 and F2013

- A 16-bit CPU and its supporting hardware, including the clock generator.
- Three clock signals are available from the basic clock module:
- **MCLK** : Master clock is used by CPU and system
- **SMCLK** : Subsystem Master clock is distributed to peripherals
- **ACLK** : Auxiliary clock is also distributed to peripherals.
- The emulation, JTAG interface and Spy-Bi-Wire are used to communicate with a desktop computer when downloading a program for debugging.
- An **emulator** is hardware or software tool that enables one computer system (called the *host*) to behave like another computer system (called the *guest*).

- **JTAG(**Joint Test Action Group) is an industry standard a 4-wire interface used for verifying designs and testing PCB's after manufacture.
- The **Spy-Bi-Wire** is a 2-wire serial interface used for programming and debugging.
- The **brownout reset** circuit detects low supply voltages such as when a supply voltage is applied to (or) removed from the VCC terminal.

(or)

- The **brownout protection** comes into action if the supply voltage drops to a dangerous level.
- The **Watchdog Timer (WDT) module** restarts the system on occurrence of a software problem (or) if a selected time interval expires. It is used to detect and recover from computer malfunction.

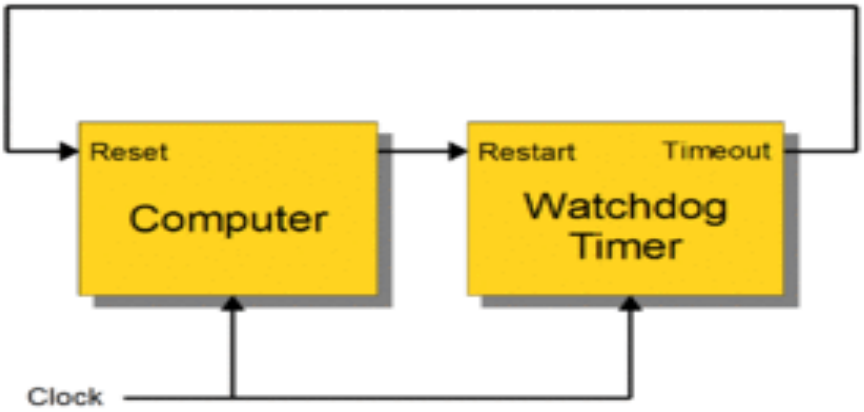

- It has flash memory, 1KB in the F2003 or 2KB in the F2013, and 128 bytes of RAM.
- The main blocks are linked by the *memory address bus* (MAB) and *memory data bus* (MDB).
- Six blocks are shown for peripheral functions. Input/output ports, Timer_A, and a watchdog timer, Universal serial interface (USI) and sigma–delta analog-to-digital converter (SD16_A) are particular features of this device.
- There are ground and power supply connections. Ground is labeled V_{SS} and is taken to define 0V. The supply connection is V_{CC}.
- Devices now work from lower voltages with a range of 1.8–3.6V is specified.

7) Write the features of MSP430 architecture?

- The MSP430 microcontroller from Texas Instruments (TI) is a 16-bit RISC based Mixed Signal Processor with Von-Neumann architecture, designed for low power and portable applications.
- The architecture supports different low-power modes, and it is optimized to achieve extended battery life in portable measurement applications.
- It is extremely easy to put the device into a low-power mode. No special instruction is needed: The mode is controlled by bits in the status register.
- The address and data buses are 16-bits wide and the registers in CPU are also 16-bits wide. Hence the registers can be used for either data (or) addresses
- Since it has 16-bit address bus, it can address 64KB of memory (RAM/ROM/Flash/Reg). The amount of on-chip memory varies for different families of MSP430.
- A wide range of peripherals are available, many of which can run autonomously without the CPU for most of the time.
- Many portable devices include liquid crystal displays, which the MSP430 can drive directly.
- Some MSP430 devices are classed as application-specific standard products (ASSPs) and contain specialized analog hardware for various types of measurements.
- **Nested vectored interrupt controller**.
- Allows fast and flexible interrupt handling for peripherals. Supports both edge and level-triggered interrupts
- Up to 80 general-purpose I/O pins depending on package.
- Configurable as input/output with pull-up/pull-down resistors.
- Some pins multiplexed with special functions (ADC, timers, communication).

8) Write about characteristics of MSP430 microcontroller?

- Although there are variants in devices in the family, a MSP430 microcontroller can be characterized by:
- Flash (or) ROM-based low-power MCUs
- CPU clock: 8/16 MHz
- Operating voltage: 1.8–3.6 V
- Power specification overview, as low as:

  0.1 µA RAM retention

  0.7 µA real-time clock mode operation

  160 - 250 µA/MIPS at active operation(Million Instructions Per Second)

- Fast wake-up from standby mode in less than 1 µs.
- Device parameters
  - Flash/ ROM options: 1 KB – 60 KB
  - RAM options: 128 B– 8 KB
  - GPIO options: 14 - 80 pins (General Purpose Input and output)
- Other integrated peripherals:
- 10/12/16-bit Analog-to-Digital Converter (ADC);
- 12-bit dual Digital-to-Analog Converter (DAC);
- Comparator-gated Timers;
- Watch Dog Timer
- SPI, I2C, UART
- Operational Amplifiers (OP Amps)

- 16×16 multiplier
- Comparator A
- Temp. sensor
- LCD driver
- Supply Voltage Supervisor (SVS)
- Brown out Reset
- 16-bit RISC CPU:
- Instructions processing on either bits, bytes or words;
- Compact core design reduces power consumption and cost;
- Compiler efficient;
- 27 core instructions;
- 7 addressing modes;
- Extensive vectored-interrupt capability.

9) Write about program counter (PC) and stack pointer (SP) of MSP430?

- **R0: Program Counter (PC) :**

  The 16-bit Program Counter (PC) points to address of the next instruction to be fetched from memory and executed by the CPU.

  The Program counter is incremented by the number of bytes used by the instruction (2, 4, or 6 bytes, always even).

The Program Counter is a special-purpose register in the MSP430 that keeps track of the address of the next instruction to execute.

- 16-bit register (since MSP430 is a 16-bit MCU).

EX: If the current instruction is at address 2000, the PC will contain 2002 (next instruction) after execution.

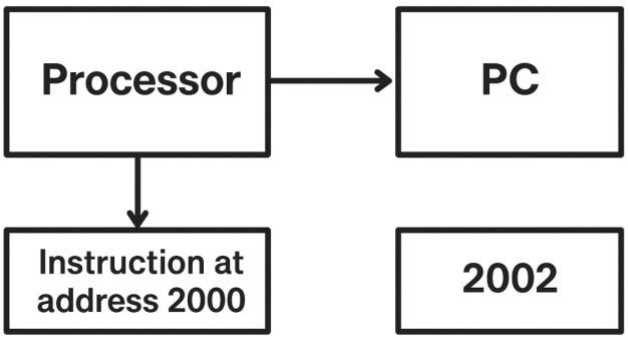

- **R1: Stack Pointer (SP):**

  The 16-bit Stack Pointer (SP) holds the address of the stack-top.

  The stack memory is a memory block where the data is stored in LIFO manner.

- Initialized at the top of RAM and grows downward (toward lower memory addresses) as data is pushed.
- Supports stack operations like PUSH (store value on stack) and POP (retrieve value from stack).

EX : During a subroutine call, the return address is pushed to the stack, and SP moves to the new top address.

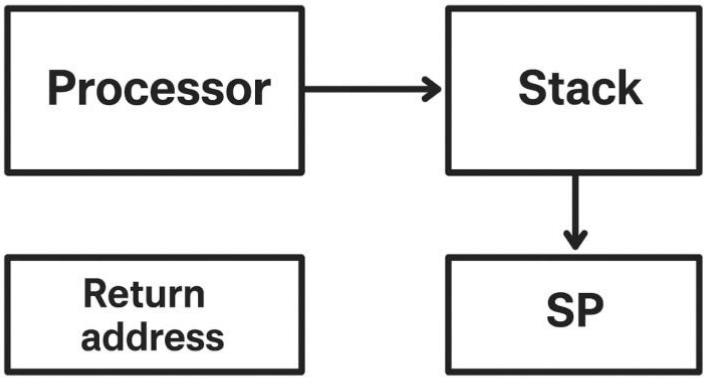

10) A) Compare microprocessor and microcontroller ?

Microprocessor	Microcontroller
1.µp contains ALU, Registers and Timing control units.	1. µc contains all the features of µp and as well as internal RAM, ROM, I/O ports, Serial data port, Timers/Counters,..etc.
2.Microprocessor is a digital computer CPU that fetches the instructions from memory and executes them.	2. Microcontroller is a true computer on the chip, used to control the operation of a machine using fixed program.
3. µp s are used for general purpose applications.	3. µc s are used for some specific control applications.
4. To make a computer, µp requires additional devices such as Memory, I/O ports, Timers, CLK generator..etc.	4. µc can function as a computer with the addition of no external devices.
5. µp is concerned with rapid movement of data &code from external memory to CPU	5. µc is concerned with rapid movement of data and code within the Chip.
6. µp will have many instructions for the movement of data from external memory to CPU.	6. µc has only one (or) two instructions for moving data external memory to CPU.
7. µp will have one (or) two types of bit-handling-instructions.	7. µc has many bit-handling-instructions.

B) List the various applications of microcontroller?

- **Automobiles**
- **Aeronautics**
- **Space**
- **Rail Transport**
- **Mobile communications**
- **Industrial Processing**
- **Remote sensing and Radio Networking**
- **Robotics**
- **Consumer Electronics**
- **Defense applications**
- **Medical devices.**

- **Washing machines, microwave ovens, and refrigerators for automated control.**
- **Remote controls and smart home devices.**
- **Digital cameras and camcorders.**
- **Engine control units (ECU) for fuel injection, ignition, and emission control.**
- **Anti-lock braking system (ABS) and airbag systems.**
- **Dashboard instruments, speedometers, and automatic lighting.**
- **Robotics and automated machinery control.**
- **Motor control systems (e.g., conveyor belts, pumps, CNC machines).**
- **Process control and factory automation.**
- **Heart rate monitors, ECG machines, and blood pressure monitors.**